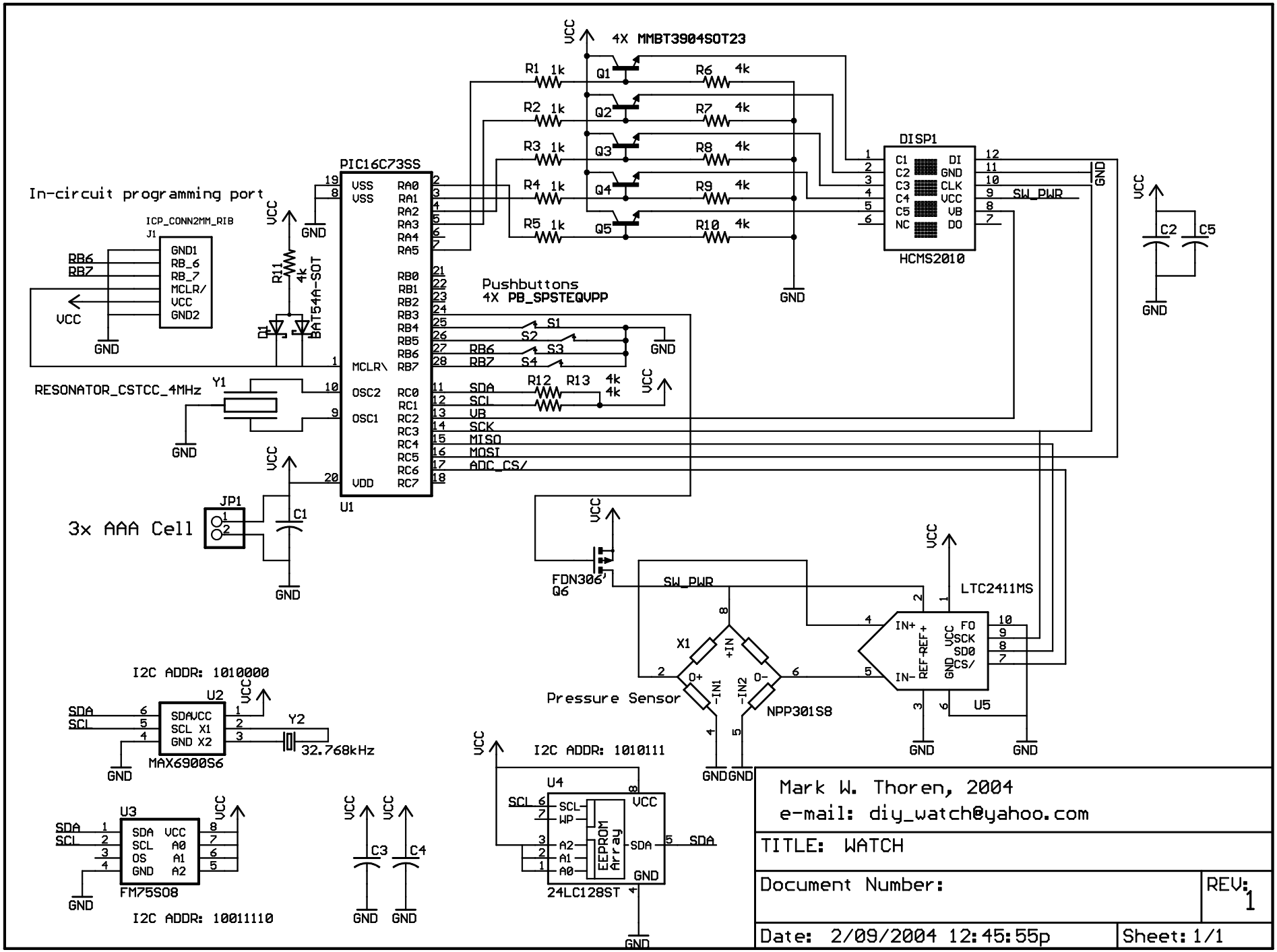

Mark W. Thoren, 2004
e-mail: diy_watch@yahoo.com

TITLE: WATCH

Document Number:

REV: 1

Date: 2/09/2004 12:45:55p

Sheet: 1/1
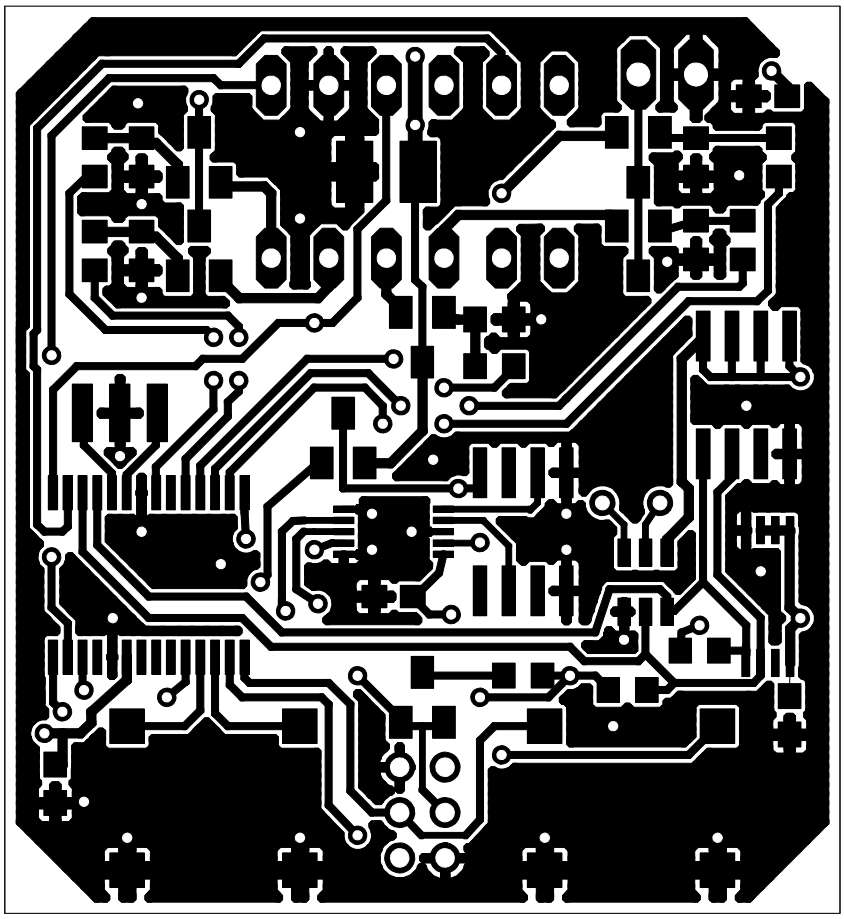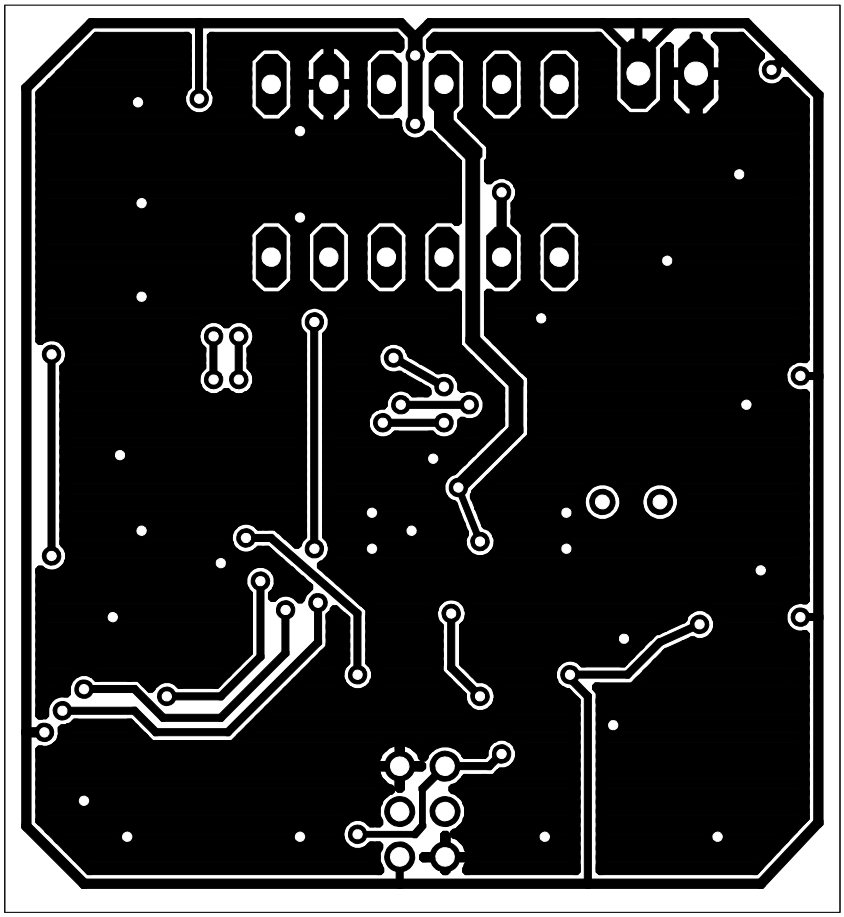
R1
R6
Q1
C5
DISP1
1
JP1
C3
R10
R5
Q5
R4
Q4
R9
R2
R7
Q2
R8
R3
Q6
Q3
Y2
U3
U1
U5
X1
U2
U4
C4
R11
R13
R12
D1
C1
TIME/DATE
ALTI/BARO
TEMP
SURPRISE
C2